00.051096.10

?	
1	041404
2	059206
3	056002
4	063384
5	056004
6	041410
7	063382
8	063383
9	059200
10	041409
11	059201
12	059205
13	063380
14	063381
15	059210
16	063375
98	063399

▶ 000
▶ 09/06
▶ SFT-R

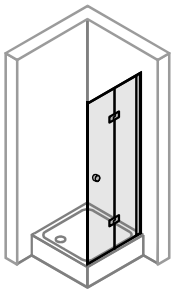
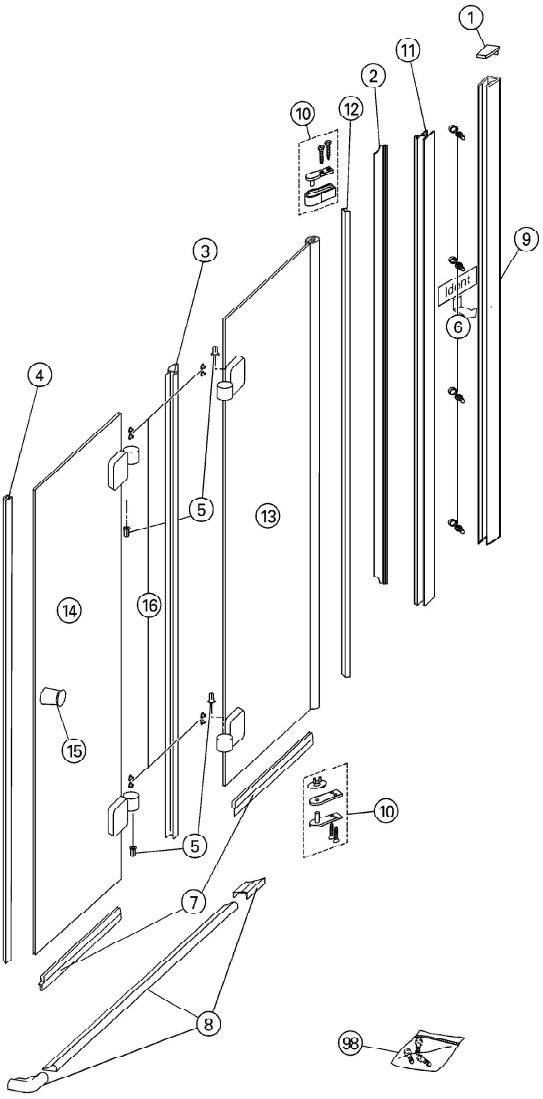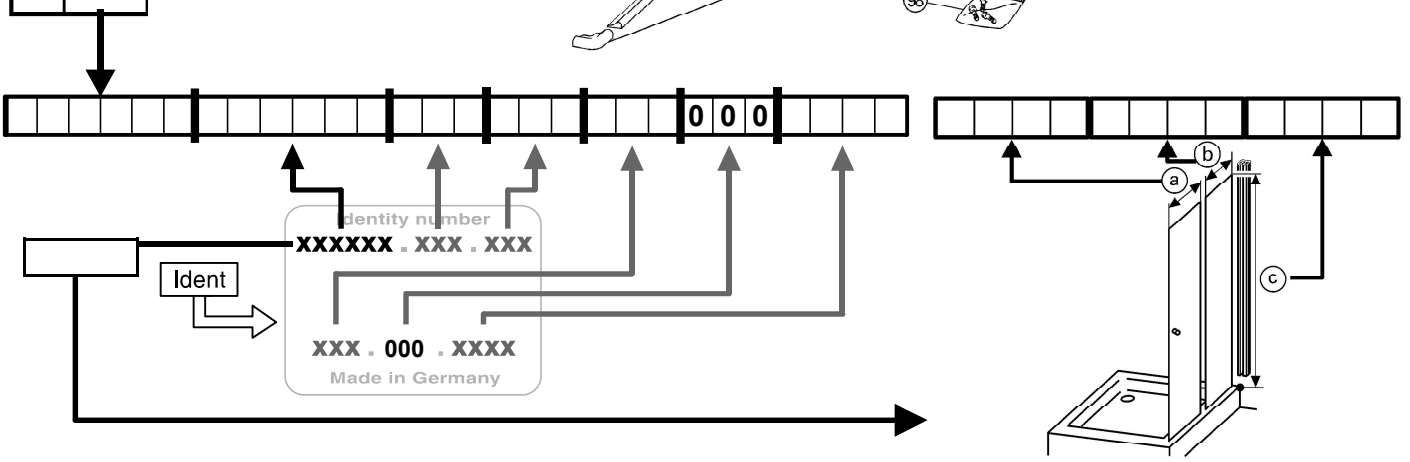
IL6